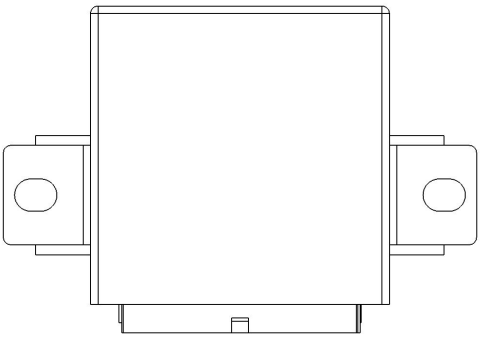

mounting direction

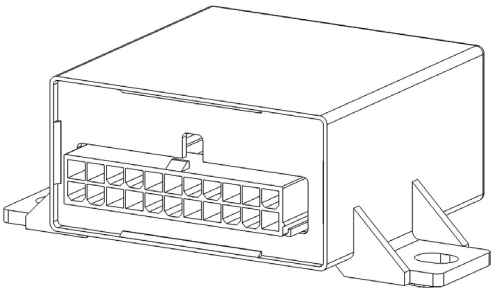

view of plug

DESCRIPTION

The versatile CAN I/O PLC with 14 inputs and outputs impresses with its compact design and its operating voltage range of 9 to 32 volts. It provides 8 I/Os that can be configured as inputs or outputs and 6 analog inputs.

TECHNICAL DATA

Housing	plastic
Connector	22 pin Molex Mini Fit Junior
Weight	75 g
Temperature range (according to ISO 16750-4)	-40 to +85 °C (at +85 °C rated power see page 4)
Environmental protection acc. to ISO 20653	IP53
Current consumption	30 mA
Over-current Protection	1 A + load
Total Inputs and outputs	14 (6 inputs, 8 I/O's)
Inputs	**Configurable as:** Digital, positive encoder signal analog (0…11.4 / 33.68 V) **Depending on assembly:** Digital, low side switch encoder signal frequency input analog input (0…24.5 mA, PT1000 sensor)
Outputs	**Configurable as:** Digital, positive switching (high side) **Depending on assembly:** PWM output (3 Hz…500 Hz) reference voltage source (5 V)
Supply voltage	9–32 V 12 V (Code C) and 24 V (Code E) ISO 16750–2 compliant
Overvoltage protection	≥ 33 V
Quiescent current	40 µA (at 12 V); 140 µA (at 24 V)
Reverse polarity protection	Yes
CAN Interfaces	CAN bus interface 2.0 A/B, ISO 11898-2 compliant

REGULATORY APPROVALS AND TESTING

E1 Approval	10 R - 05 8238 (for rev. F, see label on the back of the housing)
Electrical tests	According to ISO 16750: Short circuit protection (Exception: Pin 11/22) Reverse polarity protection Interruption pin Interruption plug Storage test T_{max} and T_{min} Operation test T_{max} and T_{min} temperature steps Moist heat Reset behavior at voltage drop According to ISO 7637-2: pulse 1, 2a, 2b, 3a, 3b, 4 According to ISO 10605 ESD Protection ± 15 kV Housing, ± 8 kV Pins

SOFTWARE/PROGRAMMING

Programming System

MRS APPLICS STUDIO
The Applics Studio is the new development and tool platform for our assemblies. Program your MRS controls quickly and easily with our stand-alone software. The focus is on your application.

©MRS Electronic GmbH & Co. KG

INPUT FEATURES - SUMMARY

Pin 3, 4, 5, 6, 7	Usable as analog or digital input Resolution Accuracy	 12 Bit ± 1 % full scale
Voltage input 0…11,4 V (see A)	Input resistance Input frequency Accuracy	22.6 kΩ f_c*= 60 Hz ± 3 %
Current input 0…24,5 mA (see C)	Input resistance Input frequency Conversation factor	500 Ω 40 Hz 1mA ≙ 475 digits
Frequency (see D)	Input resistance Input frequency Turn-on threshold Turn-off threshold	22.6 kΩ ± 3% accuracy at ≤ 2.2 kHz 7 V 4.7 V
Digital input positive (see A)	Input resistance Input frequency Turn-on threshold Turn-off threshold	22,6 kΩ f_c*= 60 Hz 7 V 4.5 V

Pin 2	Usable as analog or digital input Resolution Accuracy	12 Bit ± 1 % fulll scale
Voltage input 0…33,68 V(see B)	Input resistance Input frequency Accuracy	66.6 kΩ f_c*= 40 Hz ± 3 %
Current input 0…24,5 mA (see C)	Input resistance Input frequency Conversion factor	470 Ω 40 Hz 1mA ≙ 475 digits

*f_c= cutoff frequency (-3 dB)

Frequency input (see D)	Input resistance Input frequency Turn-on threshold Turn-off threshold	22.6 kΩ ± 3% accuracy at ≤ 2.2 kHz 7 V 4.5 V
Digital input Positive (see B)	Input resistance Input frequency Turn-on threshold Turn-off threshold	66.6 kΩ f_c*= 40 Hz 19 V 14 V

Pin 13, 14, 15, 16, 18, 19	Resolution Accuracy	12 Bit ± 1 % full scale
Voltage input 0…11,4 V (see E)	Input resistance Input frequency Accuracy	22.6 kΩ f_c*= 60 Hz ± 5 %
Digital input positive (see E)	Input resistance Input frequency Turn-on threshold Turn-off threshold	22.6 kΩ f_c*= 60 Hz 7 V 4,5 V

Pin 20, 21	Usable as digital input Resolution Accuracy	 12 Bit ± 1 % full scale
Digital input Positive (see E)	Input resistance Input frequency Turn-on threshold Turn-off threshold	22.6 kΩ f_c*= 60 Hz 7 V 4,5 V

OUTPUT FEATURES - SUMMARY

Pin 13, 14	Protective circuit for inductive loads	Optional integrated
	Wire fault diagno-stics	Possible via current sense
	Short circuit diagno-stics	Possible via current sense
Digital, positive switching (High-Si-de; see E)	Switching voltage Max. switching current	9-32 V DC 2.5 A
Short circuit protection against GND and U_B	Internal overtemperature protection, latch-off can be realized by software application	

Pin 15, 16, 18, 19, 20, 21	Protective circuit for inductive loads	Optional integrated
	Wire fault diagno-stics	Possible via current sense
	Short circuit diagno-stics	Possible via current sense
DiGital, positive switching (High-Si-de; see E)	Switching voltage Max. switching current Conversion factor current sense	9-32 V DC 2.5 A 1 Digit ≙ 2.26 mA
PWM-output (see F)	Output frequency Duty cycle Resolution Max. switching current	500 Hz 0…1000 ‰ 1 ‰ 2.5 A
Short circuit protection against GND and U_B	Internal overtemperature protection, latch-off can be realized by software application	

©MRS Electronic GmbH & Co. KG

PIN ASSIGNMENT POWER SUPPLY AND INTERFACES

Pin	Description
1	Ground / contact 31 according to DIN 72552
8	Battery/ignition contact 15 according to DIN 72552
12	Supply voltage for output pins 13 through 16, operating voltage for CPU
17	Supply voltage for output pins 18 through 21, operating voltage for CPU

Pin	Description
9	CAN bus high
10	CAN bus low
11	RS 485 - A / RS232 Tx / ground (assembly option, otherwise not connected)
22	RS-485 - B / RS232 Rx / 5 VREF / 3 VREF (assembly option, otherwise not connected)

PIN ASSIGNMENT IN- AND OUTPUTS

The alternative functions like frequency/current/pull-up or PT1000-inputs depends on the assembly variants (see table on page 6).

Pin	Signal	Description
2	ANA5 / D_ANA5	Analog input 5; 0-33.68 V can also be used as digital input
3	ANA4 / D_ANA4	Analog input 4; 0-11.4 V can also be used as digital input
4	ANA3 / D_ANA3	Analog input 3; 0-11.4 V can also be used as digital input
5	ANA2 / D_ANA2	Analog input 2; 0-11.4 V can also be used as digital input
6	ANA1 / D_ANA1	Analog input 1; 0-11.4 V can also be used as digital input
7	ANA0 / D_ANA0	Analog input 0; 0-11.4 V can also be used as digital input
13	ANA_IO0 / D_IN0 OUT_HSD0	Analog/digital input IO0 or digital output DO0
14	ANA_IO1 / D_IN1 OUT_HSD1	Analog/digital input IO1; 0-11.4 V or digital output DO1

Pin	Signal	Description
15	ANA_IO2 / D_IN2 OUT_HSD2	Analog/digital input IO2; 0-11.4 V or digital output DO2 with PWM capability
16	ANA_IO3 / D_IN3 OUT_HSD3	Analog/digital input IO3; 0-11.4 V or digital output DO3 with PWM capability
18	ANA_IO4 / D_IN4 OUT_HSD4	Analog/digital input IO4; 0-11.4 V or digital output DO4 with PWM capability
19	ANA_IO5 / D_IN5 OUT_HSD5	Analog/digital input IO5; 0-11.4 V or digital output DO5 with PWM capability
20	D_IN6 OUT_HSD6	Digital input IO6; 0-11.4 V or digital output DO6 with PWM capability
21	D_IN7 OUT_HSD7	Digital input IO7; 0-11.4 V or digital output DO7 with PWM capability

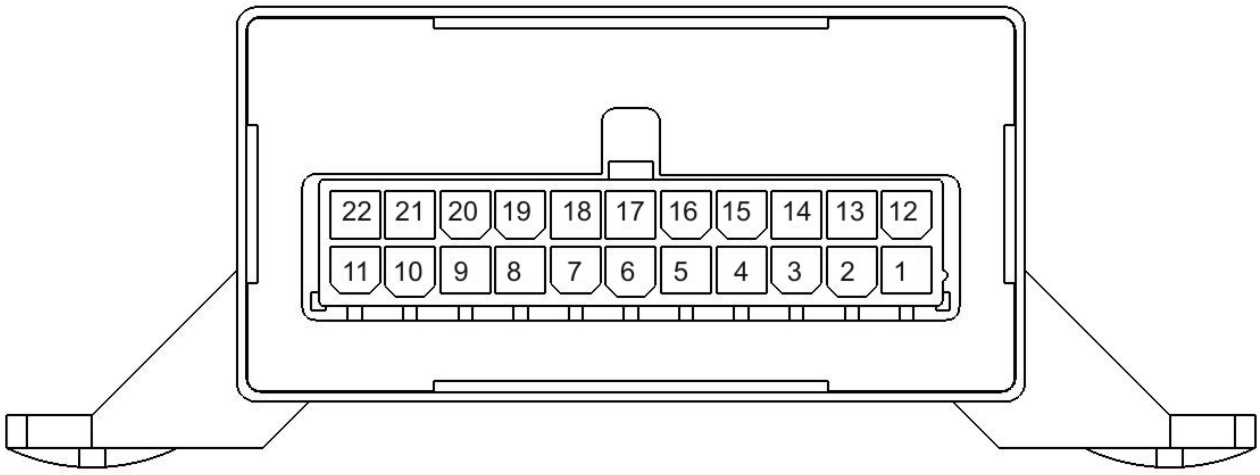

 ©MRS Electronic GmbH & Co. KG

PIN FEATURE MAP

I/O

Pin	Analog input	Digital input	Digital output	PWM output
13	ANA_IO0	D_IN0	HSD0	
14	ANA_IO1	D_IN1	HSD1	
15	ANA_IO2	D_IN2	HSD2	PWM_IO2
16	ANA_IO3	D_IN3	HSD3	PWM_IO3
18	ANA_IO4	D_IN4	HSD4	PWM_IO4
19	ANA_IO5	D_IN5	HSD5	PWM_IO5
20		D_IN6	HSD6	PWM_IO6
21		D_IN7	HSD7	PWM_IO7

Analog inputs (depends on assembly variant)

Pin	Signal	Description
2	ANA5	0-33.7 V / RPM
3	ANA4	0-11.4 V / PU
4	ANA3	0-11.4 V / RPM
5	ANA2	0-11.4 V / 0-24.5 mA / PU
6	ANA1	0-11.4 V / 0-24.5 mA / PU
7	ANA0	0-11.4 V / 0-24.5 mA / PU

ECU

Freescale S08DZ60
Clock frequency: 40 MHz
Flash: 60 K
RAM: 4 K
EEPROM: 2K

Interfaces

Pin	Signal	Output	Description
9	CAN-H		CAN bus high
10	CAN-L		CAN bus low
11	RS485-A/RS232Rx	GND	RS485-A, RS232Rx or ground (optional)
22	RS485-B/RS232Tx	5VREF	RS485-B, RS232Tx or 5VREF (optional)

Power Supply

Pin	Signal	Description
1		Ground / contact 31 according to DIN 72552
8	KL15	Battery / ignition contact 15 according to DIN 72552
12		Supply voltage, CPU, HSD pin 13 through 16
17		Supply voltage, CPU, HSD pin 18 through 21

©MRS Electronic GmbH & Co. KG

BLOCK FUNCTION DIAGRAM

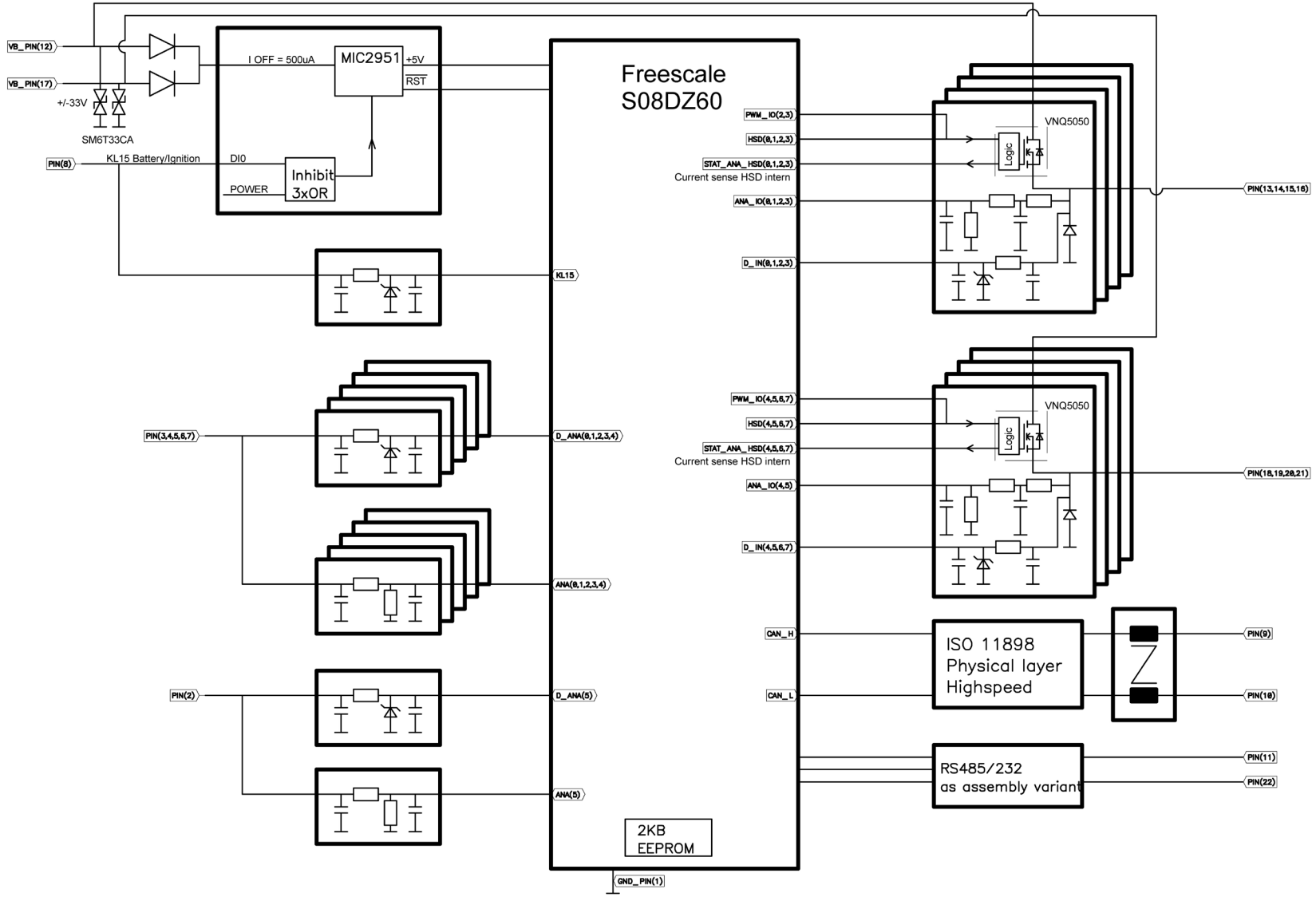

©MRS Electronic GmbH & Co. KG

TECHNICAL DRAWING IN MM [INCH], TOLERANCES ACCORDING TO ISO 2768-1 V

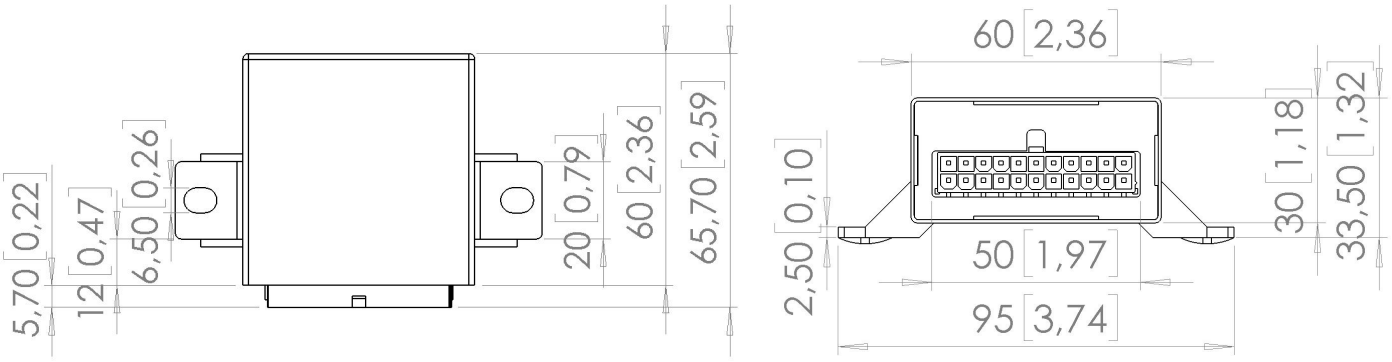

 ©MRS Electronic GmbH & Co. KG

ASSEMBLY VARIANTS AND ORDERING INFORMATIONS

	INPUT PINS						OUTPUT PINS		CAN BUS		INTERFACE		DC/DC
	A Voltage 0 - 11,4 V	B Voltage 0 - 33 V	C Current 0 - 24,5 mA	D Frequen-cy	Sensor 10kΩ Pull-up	Inputs PT1000 1kΩ Pull-up	E I/O´s (can be used as analog or digital inputs or as digital outputs)	F PWM ≤ 500 Hz	High Speed	CAN open	RS485	RS232	5 Volt / 3 Volt Referen-ce
1.033.300.0001	3,4,5,6,7	2					13,14,15,16,18,19,20,21		X				
1.033.304.0001	3,4,5,6,7	2					13,14,15,16,18,19,20,21	15,16,18,19,20,21	X				
1.033.305.0001	3,4,5,6,7	2					13,14,15,16,18,19,20,21	15,16,18,19,20,21	X				5V 22/11
1.033.306.0001	3,4	2	5,6,7				13,14,15,16,18,19,20,21	15,16,18,19,20,21	X				
1.033.308.0001		2,3,4,5,6,7					13,14,15,16,18,19,20,21		X				
1.033.309.0001	3,5,6,7			2,4			13,14,15,16,18,19,20,21	15,16,18,19,20,21	X				
1.033.30B.0001	3,4	2			5,6,7		13,14,15,16,18,19,20,21	15,16,18,19,20,21	X				5V 22/11
1.033.30C.0001	3,4	2			5,6,7		13,14,15,16,18,19,20,21		X				
1.033.30E.0001	3,5,6,7			2,4			13,14,15,16,18,19,20,21	15,16,18,19,20,21	X				
1.033.30K.0001	3,5,6,7			2,4			13,14,15,16,18,19,20,21	15,16,18,19,20,21	X				5V 22/11
1.033.30N.0001	3,4,5,6,7	2					13,14,15,16,18,19,20,21	15,16,18,19,20,21	X				3V 22/11
1.033.30P.0001	3,4	2				5,6,7	13,14,15,16,18,19,20,21	15,16,18,19,20,21	X				
1.033.320.0001	3,4,5,6,7	2					13,14,15,16,18,19,20,21		X		X		
1.033.330.0001	3,4,5,6,7	2					13,14,15,16,18,19,20,21		X			X	
1.033P.300.0001	3,4,5,6,7	2					13,14,15,16,18,19,20,21		X	X			
1.033P.305.0001	3,4,5,6,7	2					13,14,15,16,18,19,20,21	15,16,18,19,20,21	X	X			22/11

©MRS Electronic GmbH & Co. KG

SCIP NUMBERS

Assembly Variant	SCIP Number
1.033.300.0001	015d6741-fb76-4520-a38f-788d14f3a3b8
1.033.304.0001	233f34f1-6010-48fc-9f49-a91c1a9a0191
1.033.305.0001	41833622-9715-4667-ac91-991e3cef953f
1.033.306.0001	8fbb18b3-02d9-4c35-b9c0-5e549dc45886
1.033.308.0001	8fbb18b3-02d9-4c35-b9c0-5e549dc45886
1.033.309.0001	233f34f1-6010-48fc-9f49-a91c1a9a0191
1.033.30B.0001	8fbb18b3-02d9-4c35-b9c0-5e549dc45886
1.033.30C.0001	8fbb18b3-02d9-4c35-b9c0-5e549dc45886
1.033.30E.0001	8fbb18b3-02d9-4c35-b9c0-5e549dc45886
1.033.30K.0001	9003270d-247c-45f7-8e35-20937d8a1452
1.033.30N.0001	9003270d-247c-45f7-8e35-20937d8a1452
1.033.30P.0001	3ca269c8-6648-41d7-8fbd-5655c1f4773e
1.033.320.0001	015d6741-fb76-4520-a38f-788d14f3a3b8
1.033.330.0001	015d6741-fb76-4520-a38f-788d14f3a3b8
1.033P.300.0001	233f34f1-6010-48fc-9f49-a91c1a9a0191
1.033P.305.0001	41833622-9715-4667-ac91-991e3cef953f

ACCESSORIES

Description	Order Number
Programming tool MRS Developer Studio	1.100.100.09
Cable set CAN I/O	106817
Connector package CAN I/O	106940
PCAN-USB Interface	105358

MANUFACTURER

MRS Electronic GmbH & Co. KG
Klaus-Gutsch-Str. 7
78628 Rottweil

 ©MRS Electronic GmbH & Co. KG

NOTES ON WIRING AND CABLE ROUTING

The electronic system and the power outputs of a control unit must be supplied by the same power supply system.

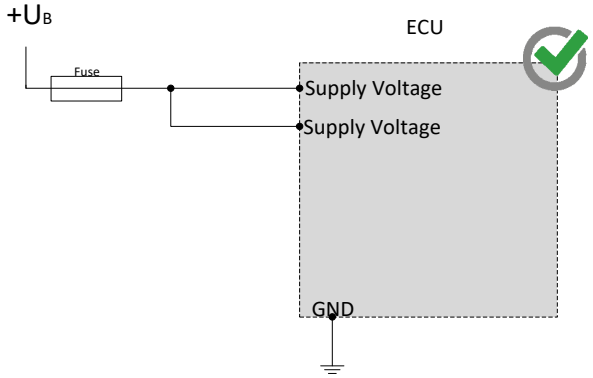

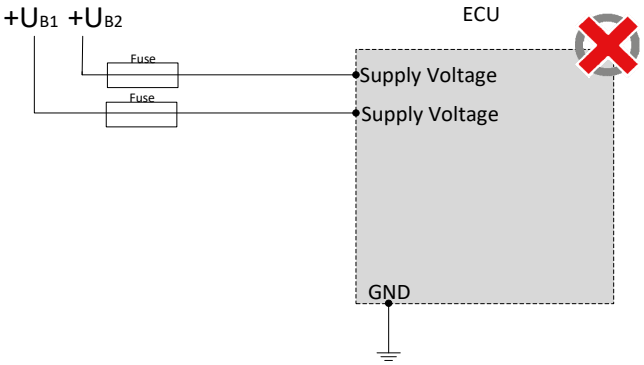

PWM outputs may not be connected with each other or bypassed.

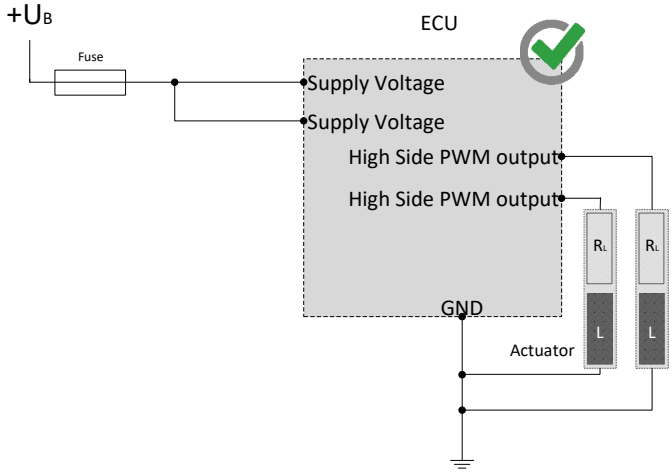

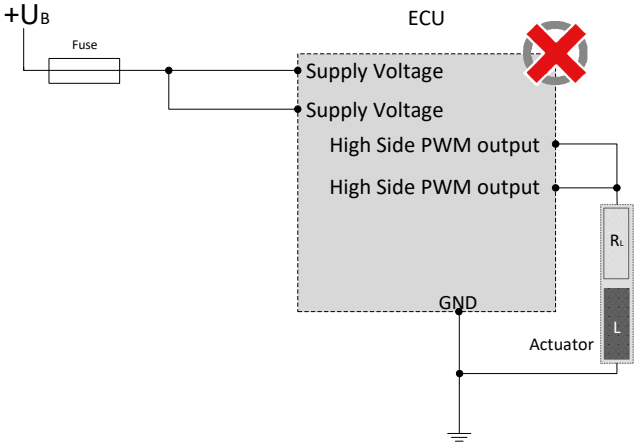

The pins (I/Os) can be used in combination and may not be switched externally against a higher voltage level than supply voltage.

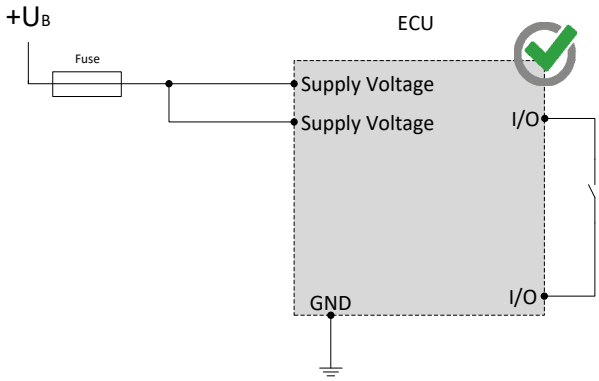

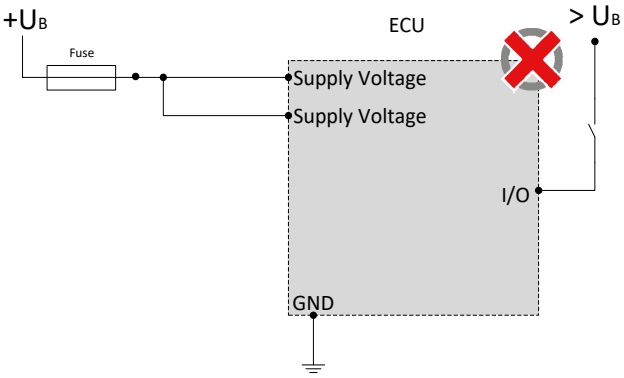

 ©MRS Electronic GmbH & Co. KG

NOTES ON WIRING AND CABLE ROUTING

Higside outputs may only be switched to ground.

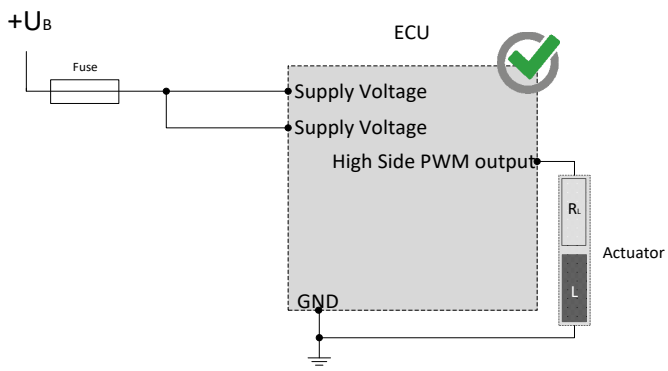

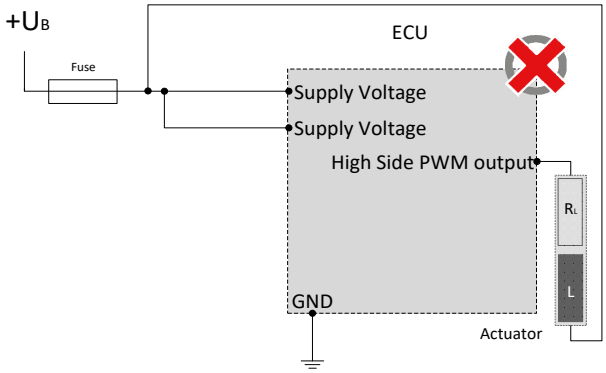

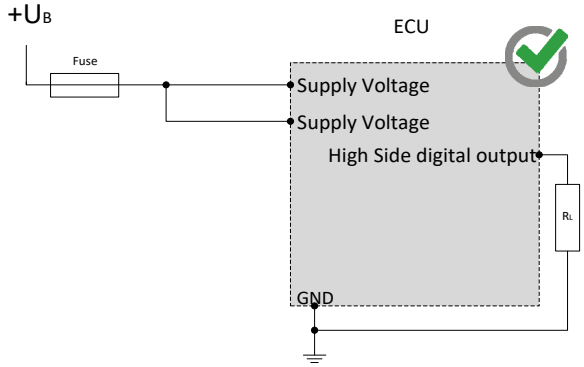

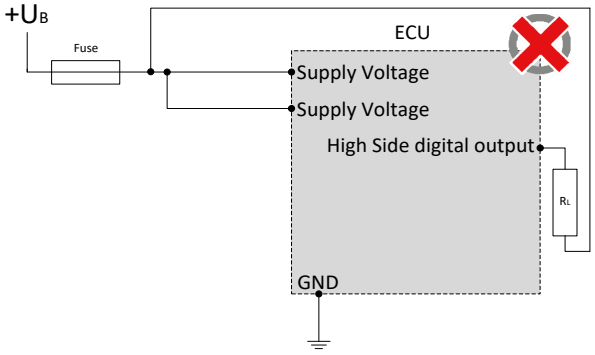

The sensor supplies can be “lifted” through an external circuitry, for example the creation of higher voltage, as they only work as a voltage source but not as voltage drain. The lift of a voltage source may lead to unforeseen malfunctions and damages of the control unit in case of permanent operation.

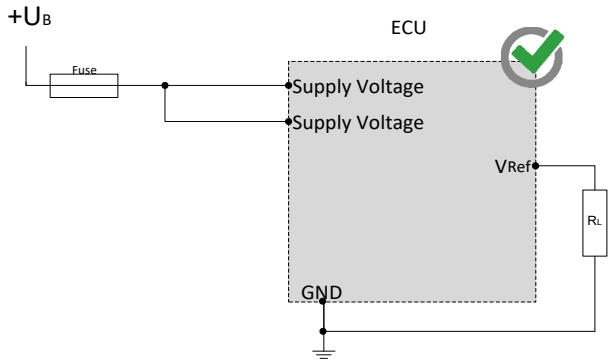

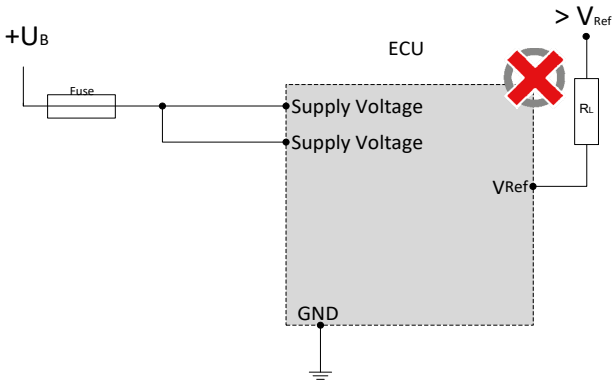

CAN bus communication is the main communication between the control unit and the vehicle. Therefore, connect the CAN bus with special care and check the correct communication with the vehicle to avoid undesired behavior.

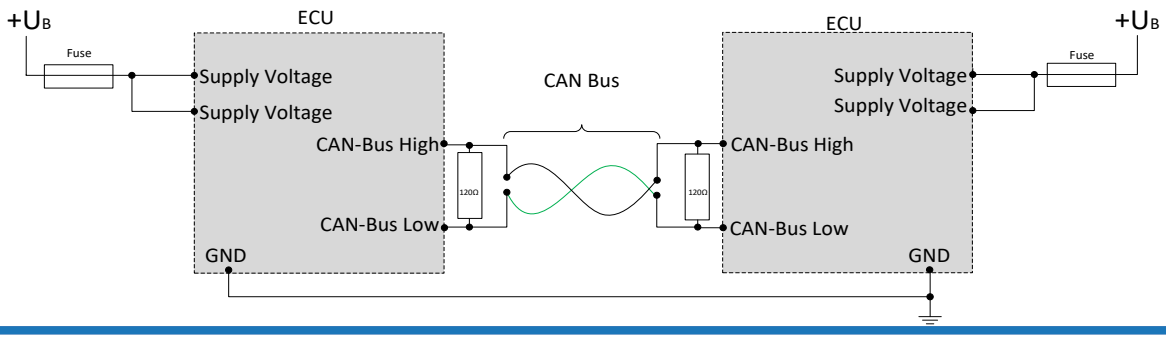

 ©MRS Electronic GmbH & Co. KG

SAFETY AND INSTALLATION INFORMATION

It is essential to read the instructions in full thoroughly before working with the device.

Please note and comply with the instructions in the operating instructions and the information in the device data sheet, see www.mrs-electronic.com

Staff qualification: Only staff with the appropriate qualifications may work on this device or in its proximity.

SAFETY

WARNING! Danger as a result of a malfunction of the entire system.
Unforeseen reactions or malfunctions of the entire system may jeopardise the safety of people or the machine.

- Ensure that the device is equipped with the correct software and that the wiring and settings on the hardware are appropriate.

WARNING! Danger as a result of unprotected moving components.
Unforeseen dangers may occur from the entire system when putting the device into operation and maintaining it.

- Switch the entire system off before carrying out any work and prevent it from unintentionally switching back on.
- Before putting the device into operation, ensure that the entire system and parts of the system are safe.
- The device should never be connected or separated under load or voltage.

CAUTION! Risk of burns from the housing.
The temperature of the device housing may be elevated.

- Do not touch the housing and let all system components cool before working on the system.

PROPER USE

The device is used to control or switch one or more electrical systems or sub-systems in motor vehicles and machines and may only be used for this purpose. The device may only be used in an industrial setting.

WARNING!Danger caused by incorrect use.
The device is only intended for use in motor vehicles and machines.

- Use in safety-related system parts for personal protection is not permitted.
- Do not use the device in areas where there is a risk of explosion.

Correct use:

- operating the device within the operating areas specified and approved in the associated data sheet.
- strict compliance with these instructions and no other actions which may jeopardise the safety of individuals or the functionality of the device.

Obligations of the manufacturer of entire systems

It is necessary to ensure that only functional devices are used. If devices fail or malfunction, they must be replaced immediately.

System developments, installation and the putting into operation of electrical systems may only be carried out by trained and experienced staff who are sufficiently familiar with the handling of the components used and the entire system.

It is necessary to ensure that the wiring and programming of the device does not lead to safety-related malfunctions of the entire system in the event of a failure or a malfunction. System behaviour of this type can lead to a danger to life or high levels of material damage.

The manufacturer of the entire system is responsible for the correct connection of the entire periphery (e.g. cable cross sections, correct selection/ connection of sensors/actuators).

Opening the device, making changes to the device and carrying out repairs are all prohibited. Changes or repairs made to the cabling can lead to dangerous malfunctions. Repairs may only be carried out by MRS.

Installation

The installation location must be selected so the device is exposed to as low a mechanical and thermal load as possible. The device may not be exposed to any chemical loads.

Install the device in such a manner that the plugs point downwards. This means condensation can flow off the device. Single seals on the cables/leads must be used to ensure that no water gets into the device.

Putting into operation

The device may only be put into operation by qualified staff. This may only occur when the status of the entire system corresponds to the applicable guidelines and regulations.

FAULT CORRECTION AND MAINTENANCE

NOTE The device is maintenance-free and may not be opened.

- If the device has damage to the housing, latches, seals or flat plugs, it must be taken out of operation.

Fault correction and cleaning work may only be carried out with the power turned off. Remove the device to correct faults and to clean it.

Check the integrity of the housing and all flat plugs, connections and pins for mechanical damage, damage caused by overheating, insulation damage and corrosion. In the event of faulty switching, check the software, switches and settings.

Do not clean the device with high pressure cleaners or steam jets. Do not use aggressive solvents or abrasive substances.

 ©MRS Electronic GmbH & Co. KG